Flow Control

Reliance® VALVES

Commercial RPZ Backflow Preventer

A range of high quality, easy to service and maintain, BA type backflow prevention devices, to protect plumbing systems from contamination, back pressure or back siphonage up to fluid category 4.

Overview

The Reliance Valves Backflow Preventer is a unique and patented valve that is ideal for protecting commercial and industrial plumbing systems from contamination up to and including fluid category 4. Compliant with UK water regulations and approved by KIWA, the valve is made from lead-free 4MS compliant DZR brass.

Incorporating a one-piece cartridge, the valve is easy to access which makes servicing and maintenance fast and simple, while minimising downtime. The valve is designed with a detachable upper body to make the cartridge more accessible.

Features and benefits

- BS EN1717 compliant valve that offers the highest level of mechanical protection against backflow and contamination, for use for up to fluid category 4 applications
- Lead-free and non-toxic 4MS compliant DZR brass body
- Easily accessible one-piece cartridge and detachable upper body for fast and simple servicing
- Supplied with test point isolating valves and caps to make testing quick and easy
- Integral cartridge strainer protects the valve from system debris
- Integral tundish with FBSP connections creates an air-gap between the wastewater and the mains water supply
- Flat faced union MBSP connections allow the body to be removed without disruption to the pipe work
- Flat faced unions make servicing and/or replacing the valve quick and easy.
- Lever ball valves also available for up and downstream supply isolation

Product code	Description	Size
RPZV270001	RPZ Backflow Preventer valve	1/2”
RPZV270005	RPZ Backflow Preventer valve	3/4”
RPZV270010	RPZ Backflow Preventer valve	1”
RPZV270015	RPZ Backflow Preventer valve	1 1/4”
RPZV270020	RPZ Backflow Preventer valve	1 1/2”
RPZV270025	RPZ Backflow Preventer valve	2”

Flow Control

RPZ Backflow Preventer

Working parameters & specifications	
Maximum working pressure	10 bar
Maximum working temperature	65ºC
Mounting position	Horizontal, tundish facing downwards
Flow rate	DN15: 2.9 m3h (48LPM) at 1.5 bar △p DN20: 5.1 m3h (85LPM) at 1.5 bar △p DN25: 7.9 m3h (132LPM) at 1.5 bar △p DN32: 13.0m3h (217LPM) at 1.5 bar △p DN40: 20.3m3h (338LPM) at 1.5 bar △p DN50: 31.8m3h (530LPM) at 1.5 bar △p

Application	
Fluid	Potable water

Materials	
Body	Lead-free DZR brass
Cartridge	High quality synthetic material
Springs	Stainless steel
Seals	EPDM
Tundish	High grade acetal
Test points	DZR brass

Dimensions – All measurements in mm unless otherwise stated

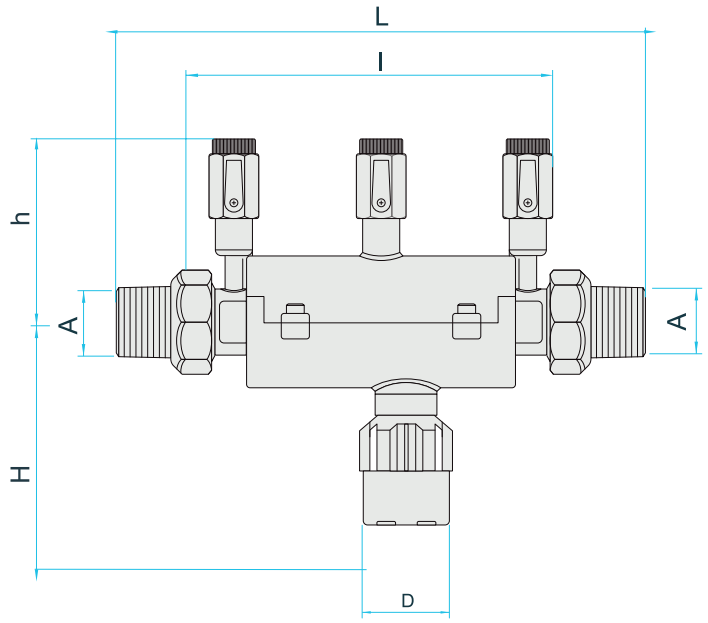

Size		DN 15	DN 20	DN 25	DN 32	DN40	DN 50
Dimensions in mm	A	R 1/2"	R 3/4"	R 1"	R 1¼"	R 1½"	R 2"
	L	201	240	248	350	354	375
	l	145	178	178	260	260	260
	H	95	95	95	115.4	115.4	115.4
	h	70	79	79	96	96	96
	D	40	40	40	40	40	40