Working Parameters and Specifications

Maximum Inlet Pressure:	25 bar
Outlet Adjustable Pressure:	1.0 - 6 bar
Pre-set Pressure:	4 bar
Maximum Temperature:	70ºC
Test Port Size:	¼" BSP
Suitable Media:	Water

Spares

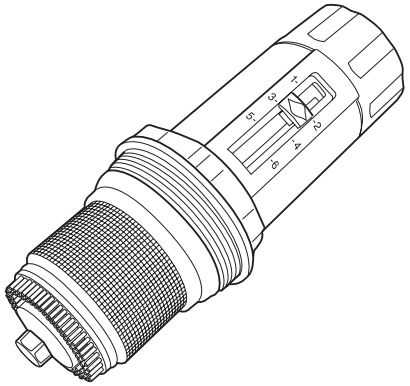

Product Code	Description
REDC315010:	Adj 1.0-6 bar PRV cartridge for ½" & ¾"MBSP valve
REDC315020:	Adj 1.0-6 bar PRV cartridge for 1"MBSP valve
REDC315030:	Adj 1.0-6 bar PRV cartridge for 1 ¼", 1 ½" & 2"MBSP valve
REDC315035:	Pre-set 3.5 bar PRV cartridge for 28mm compression

Reliance Worldwide Corporation (UK) Ltd Horton Road West Drayton UB7 8JL

Tel: +44(0)1895 449 233

www.reliancevalves.com

ZINS315010_002_07-15

Installation and Maintenance Instructions

Reliance® VALVES

315i Pressure Reducing Valves

WRAS APPROVED PRODUCT

One family of brands, one complete solution

RWC and its family of brands develop safe, sustainable and efficient solutions to help shape a better world. We engineer and innovate products to integrate seamlessly within the modern built environment. We make our customers' lives easier with a range of solutions to help them deliver, control, optimise and solve in simple, more efficient and safer ways every day.From improving plumbing and heating performance to syncing smart homes and transforming the delivery of liquid, air and data, RWC shapes a better world for millions of people around the globe.

Incorporating our industry-leading brands, Reliance Valves give you precise control over the delivery of water through a robust range of potable and non-potable plumbing products. We specialise in water pressure, temperature and thermostatic mixing valves that protect and safeguard hot and cold water systems, while creating safe and comfortable homes and workspaces.

General Function

The 315i pressure reducing valve is predominantly used in commercial installations for protection against excess supply pressure. The pressure reducing valve will protect water systems from fluctuating mains supplies, which can potentially cause damage to any plumbing system. The valves are 'drop tight' therefore they will not allow the pressure to increase (creep) under no flow conditions.

Installation

Please ensure you do not put the valve under any undue stress in the pipe work.

Install the 315i pressure reducing valve into your pipe work, it can be installed in any orientation as long as the flow is in the correct direction, this is indicated by the arrow on the base of the valve.

The minimum pipe length downstream of the PRV, before any elbow is fitted must be no less than 5 times the pipe work size. Eg. DN25 would equal 5" distance. This is to protect against noise and to ensure a laminar flow.

Commissioning

Please Note: The valve should only be adjusted when under no flow conditions.

To adjust and set the pressure on the valve:

1. Loosen the securing screw on top of the pressure reducing valve cartridge

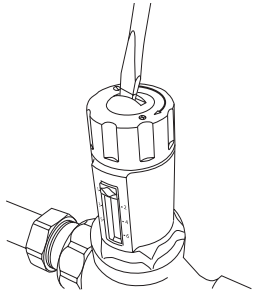

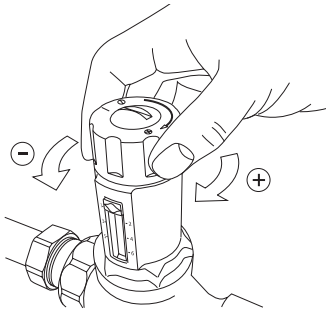

2. Twist the cap anti-clockwise to decrease the pressure down to it's minimum setting

3. Open a tap downstream of the pressure reducing valve to relieve the excess pressure for a couple of seconds.

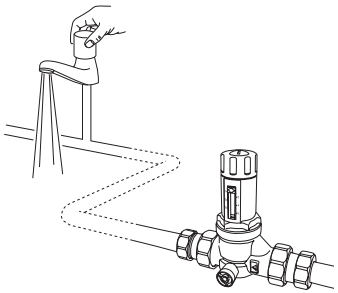

4. Twist the cap clockwise to increase the pressure to the desired setting

5. The pressure indicator on the side of the cartridge will show the set pressure, but alternatively you may fit a ¼" pressure gauge to the test ports on the base of the valve.

6. Re-tighten the securing screw on the top of the cartridge.

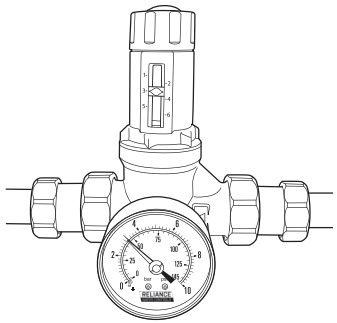

Maintenance

To service the integral strainer:

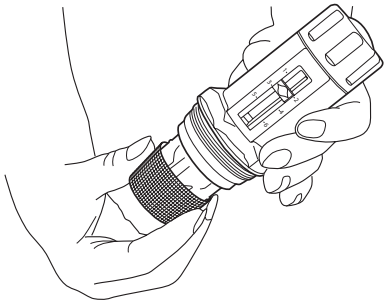

1. Isolate the water upstream and downstream of the pressure reducing valve
2. Use a spanner on the base of the cartridge to unscrew it. Once loose, you can remove the cartridge from the brass body.
3. The strainer can be found at the base of the cartridge, it can easily be removed by sliding it off the end of the cartridge

4. Rinse the strainer under clean running water, until any debris has been washed away
5. Replace the strainer onto the end of the cartridge
6. Re-insert the pressure reducing valve cartridge into the brass body
7. Using a spanner, screw the cartridge back into the valve body.